Code: VCA-4/1200

VIDEO AMPLIFIER **VCA-4/1200**

Net: 42.59 EUR Gross: 42.59 EUR

The VCA-4/1200 is designed to amplification of the video signal transmitted via coaxial cable, what enables video transmission up to 2000 m distance.
The control knob perform both gain adjustment and correction of frequency response functions. Together with increase of gain, the correction is deeper.
The amplifier must be used at the end of the transmission line (close to the monitor).

SPECIFICATION

Standard:	CVBS - PAL / NTSC
Device type:	Active
Power supply:	12 V / 90 mA (power adapter not included)
Number of channels:	4 Video
Video transmission range:	max. 1200 m
Video bandwidth:	0 ... 9 MHz
Coaxial socket impedance:	75 Ω
Coaxial socket type:	8 x BNC Straight socket
Main features:	• Signal correction
Weight:	0.1 kg
Dimensions:	117 x 30 x 80 mm
Manufacturer / Brand:	DELTA
Guarantee:	**3 years**

PRESENTATION

DELTA-OPTI Monika Matysiak; https://www.delta.poznan.pl
POL; 60-713 Poznań; Graniczna 10
e-mail: delta-opti@delta.poznan.pl; tel: +(48) 61 864 69 60

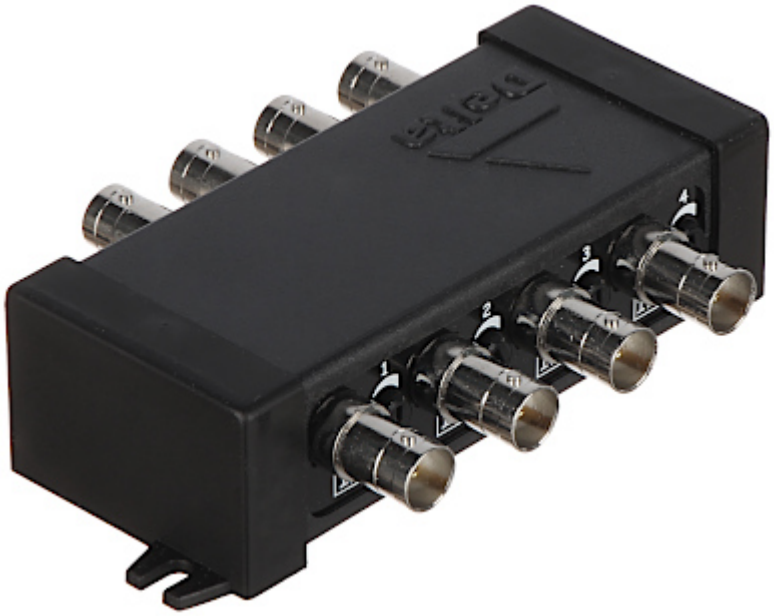

Top view:

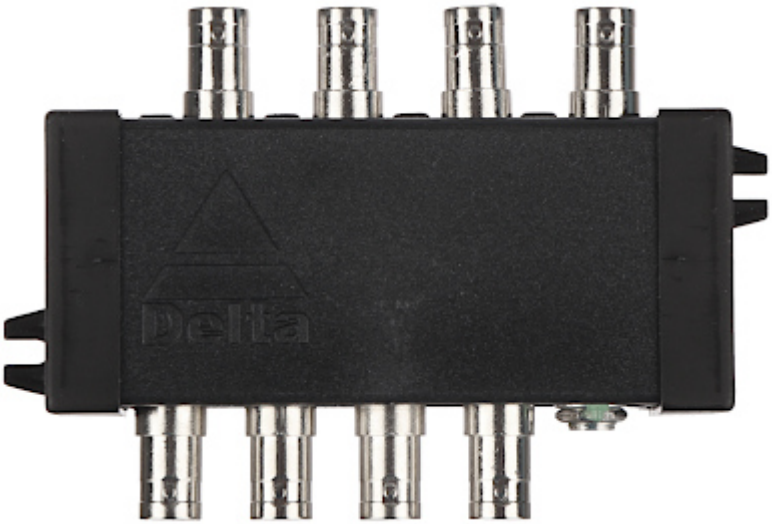

Connectors:

Connection diagram:

DELTA-OPTI Monika Matysiak; https://www.delta.poznan.pl
POL; 60-713 Poznań; Graniczna 10
e-mail: delta-opti@delta.poznan.pl; tel: +(48) 61 864 69 60

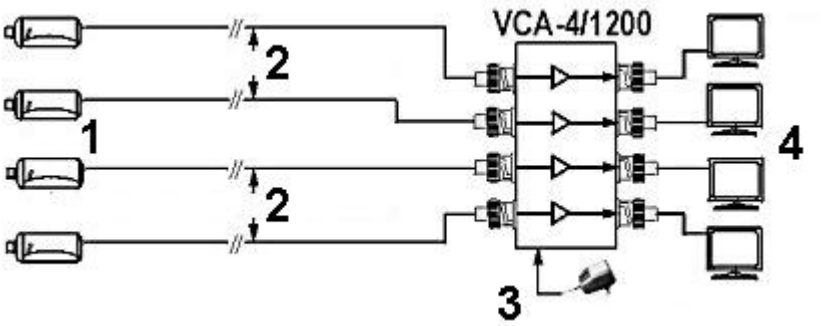

1) Cameras
2) Coaxial cable max. 1200m
3) DC 12V/100mA stabilized power adapter
4) Monitors

PACKAGE

Dimensions (L x W x H): 0x0x0 mm	Gross Weight: 0 kg