Code: AI-9/PS

POWER SUPPLY ADAPTER **AI-9/PS** FOR AI-9 FIBER FUSION SPLICER

Net: 36.87 EUR Gross: 36.87 EUR

SPECIFICATION

Model identifier:	AI-9/PS
Input voltage:	100 - 240 V AC
AC input frequency:	50 / 60 Hz
Output voltage:	13.5 V DC
Output current:	4.8 A
Output power:	65 W
Adapter type:	Switching
Protections:	Overload
Output voltage adjustment:	–
Number of outputs:	1 pcs
Power connectors type:	• 230 V IEC C14 • 13.5 V - 2.1/5.5 mm Straight plug
Housing type:	Desktop
Weight:	0.21 kg
Dimensions:	120 x 55 x 38 mm
Guarantee:	2 years

PRESENTATION

DELTA-OPTI Monika Matysiak; https://www.delta.poznan.pl
POL; 60-713 Poznań; Graniczna 10
e-mail: delta-opti@delta.poznan.pl; tel: +(48) 61 864 69 60

connector:

2.1/5.5mm plug polarization:

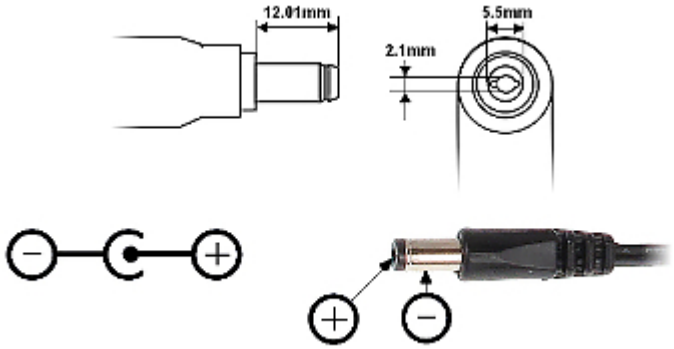

PACKAGE

DELTA-OPTI Monika Matysiak; https://www.delta.poznan.pl
POL; 60-713 Poznań; Graniczna 10
e-mail: delta-opti@delta.poznan.pl; tel: +(48) 61 864 69 60

Dimensions (L x W x H): 0x0x0 mm	Gross Weight: 0 kg